HOKKAIDO SIDEBOARD

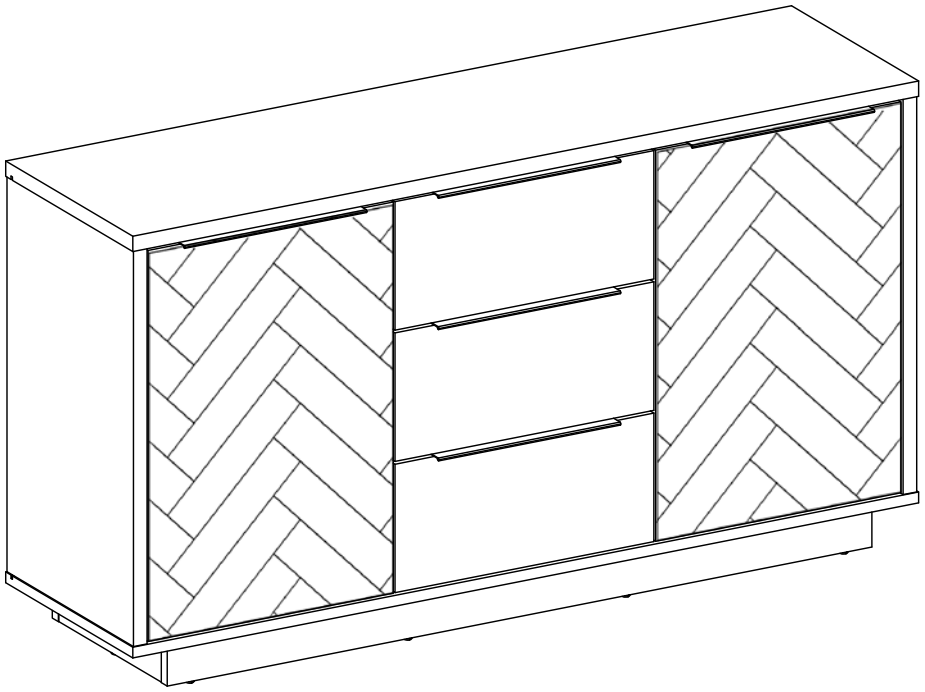

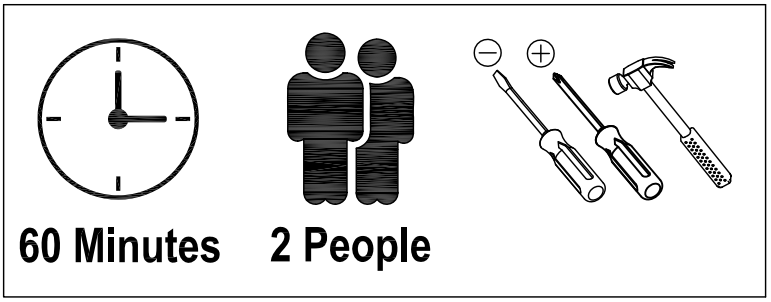

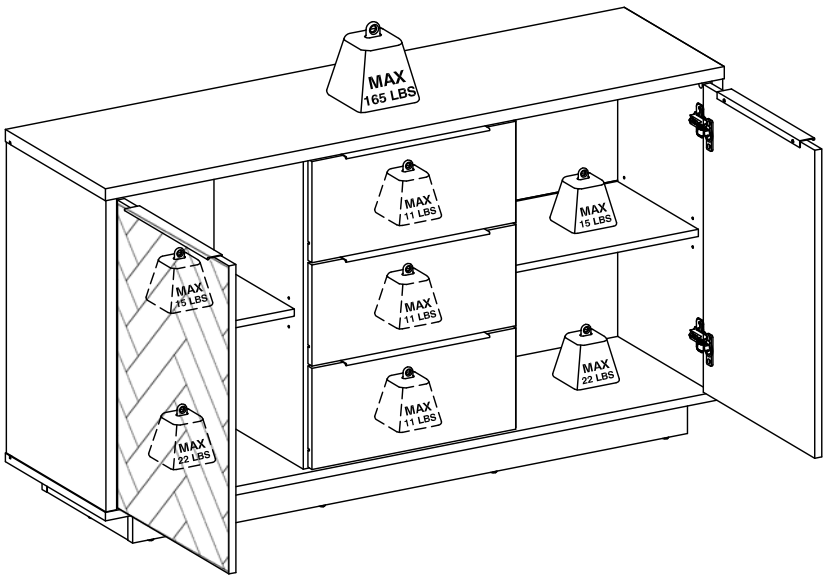

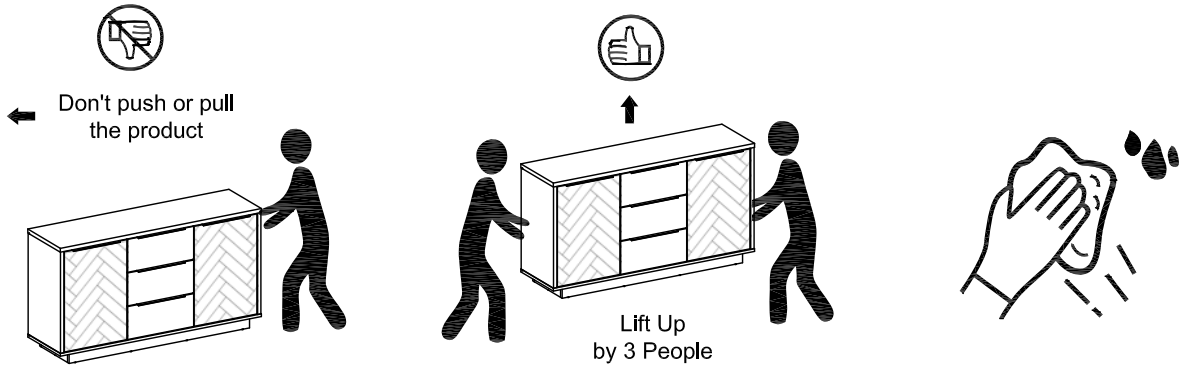

1. The load in the illustration in the **PRODUCT INFORMATION** section is a load at rest with an even distribution on all surfaces.
2. Move this product by lifting, do not push because it can damage the legs.
3. When exposed to liquid, immediately clean using a soft cloth.
4. Do not put high temperature objects without using a base.
5. The surface of the product should not be exposed to chemical liquids. Example: thinner, nail polish.
6. Cleaning the product is enough with a dry cloth, but if necessary, you can use a damp cloth instead of a wet one.
7. Safety fittings must be used to prevent furniture from falling. Safety fittings are included in this furniture package and installation instructions are listed.
8. Do not climb or hang on drawers, doors or shelves.
9. Place heavy objects in the bottom drawer.
10. The hinge can be adjusted so that the door is aligned and easy to open and close, setting the hinge slowly and not forced.
11. Surface finishing using paint.
12. Do not place hot objects directly on the surface. Always use a heat sink. There is a risk of surface bubbles due to physical contact with hot objects due to evaporation of the adhesive layer between the wooden planks and the laminate layer.
13. Do not place wet objects directly on the surface. Always use a mat so that the surface does not come into contact with liquid. There is a risk of surface discoloration and coating becoming weathered due to physical contact with wet objects.

PARTS LIST

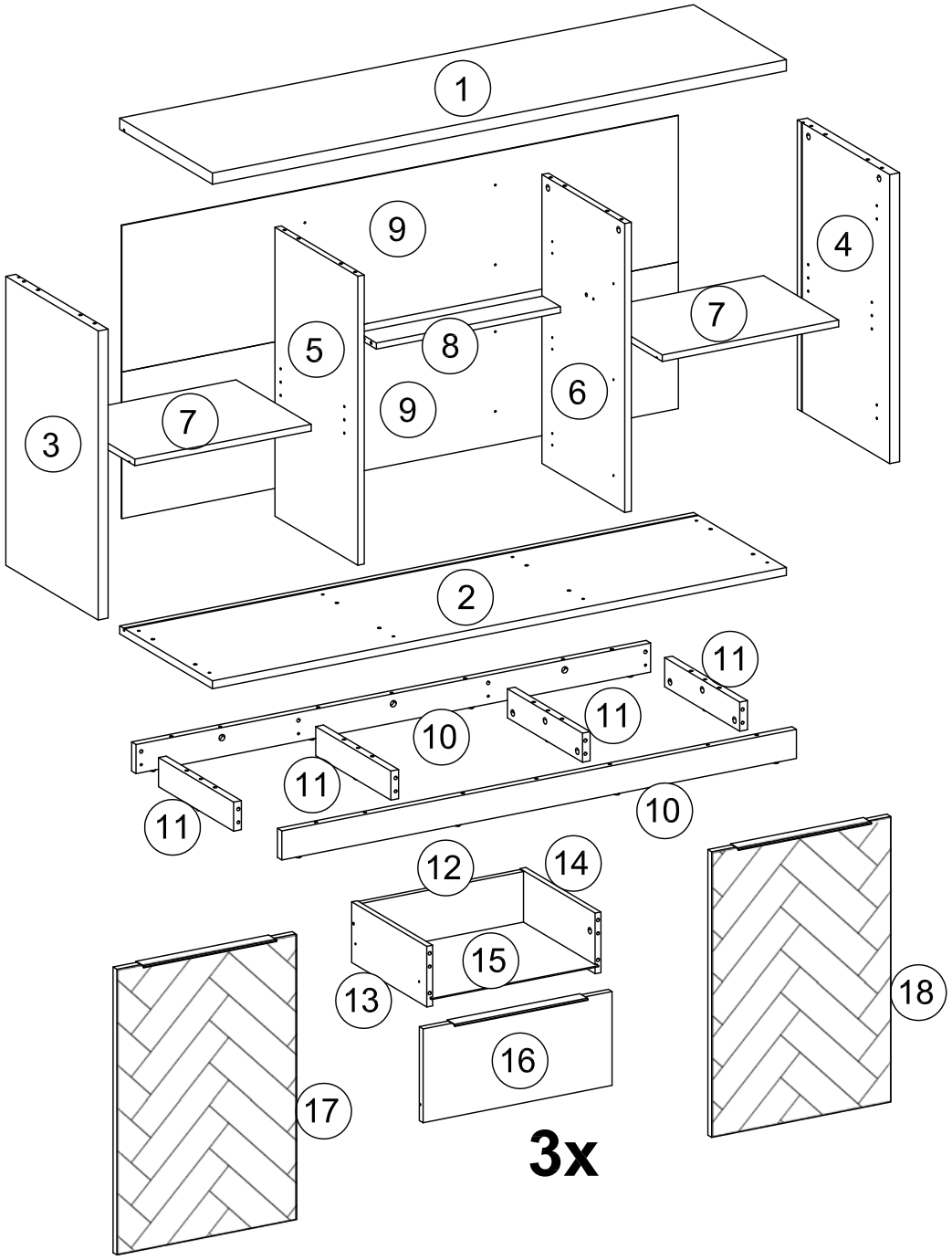

No.	Size	Qty
1	1500 x 420 x 27 mm	1
2	1500 x 420 x 20 mm	1
3	696 x 418 x 27 mm	1
4	696 x 418 x 27 mm	1
5	696 x 375 x 17 mm	1
6	696 x 375 x 17 mm	1
7	460 x 340 x 17 mm	2
8	481 x 80 x 15 mm	1
9	1452 x 353 x 4 mm	2

No.	Size	Qty
10	1345 x 70 x 20 mm	2
11	340 x 70 x 20 mm	4
12	425 x 144 x 15 mm	3
13	340 x 146 x 15 mm	3
14	340 x 146 x 15 mm	3
15	436 x 336.5 x 4 mm	3
16	493 x 226 x 17 mm	3
17	688 x 468 x 17 mm	1
18	688 x 468 x 17 mm	1

HARDWARE LIST

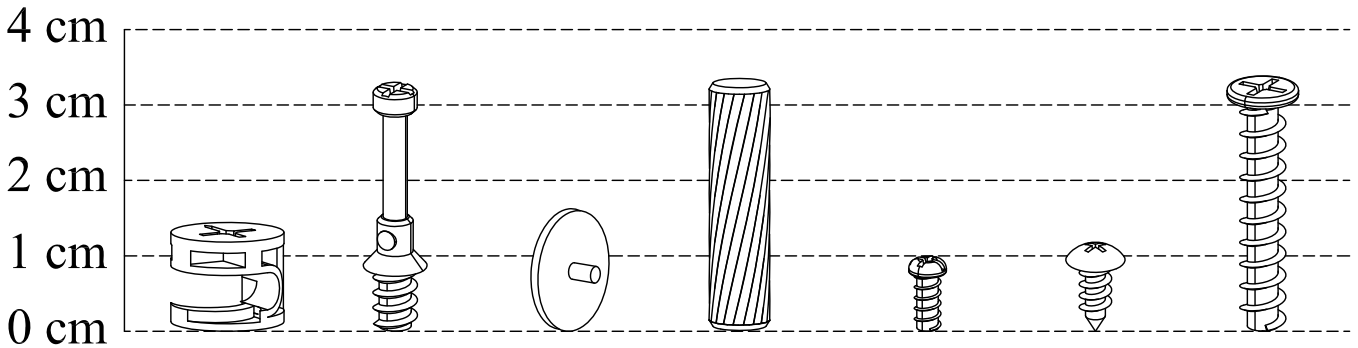

34x
DIA. 15 MM
A

34x
7.5 X 32 MM
B

34x
DIA. 17 MM
C

66x
8 X 32 MM
D

8x
4 X 10 MM
E

8x
3 X 12 MM
F

14x
10 X 33.5 MM
G

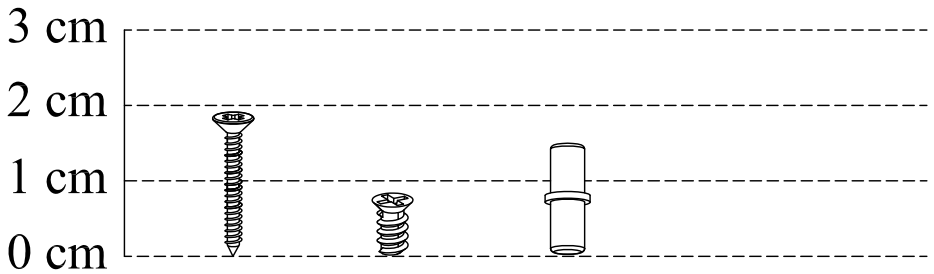

30x
4 X 19 MM
H

40x
6 X 8 MM
I

8x
7 X 16.5 MM
J

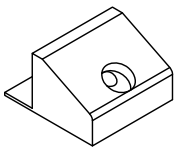

30x
K

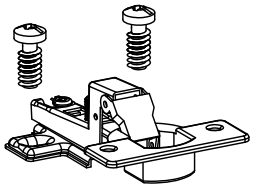

4x
L

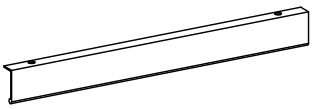

5x
M

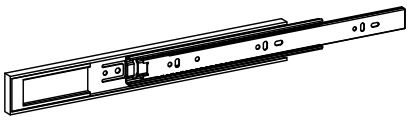

6x
N

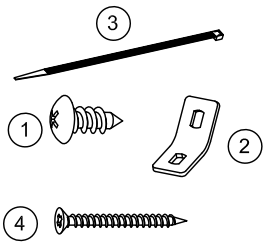

1set
O

1

B 18x

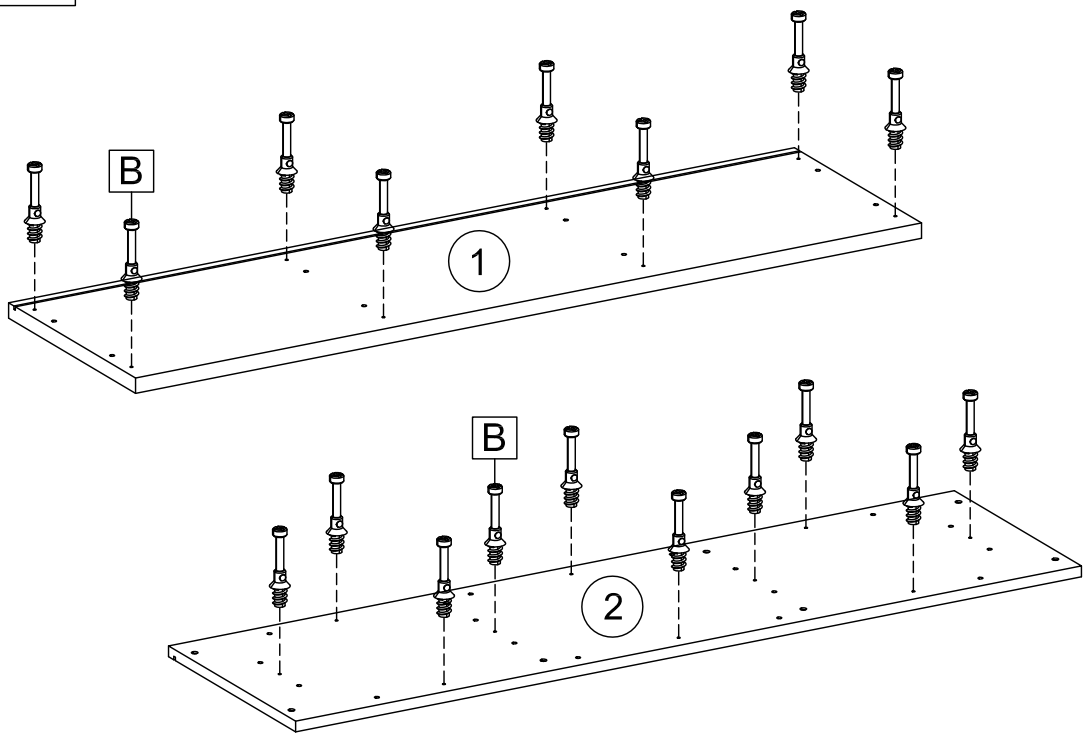

2

A 6x

D 10x

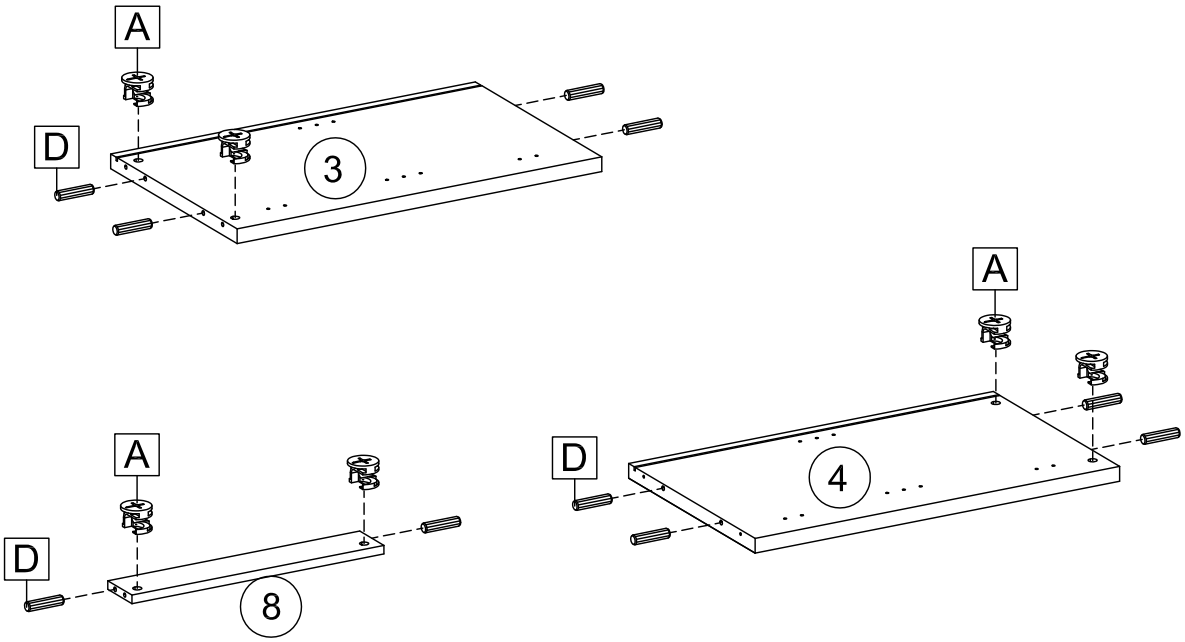

3

A	B	D	I	N
4x	2x	8x	18x	6x

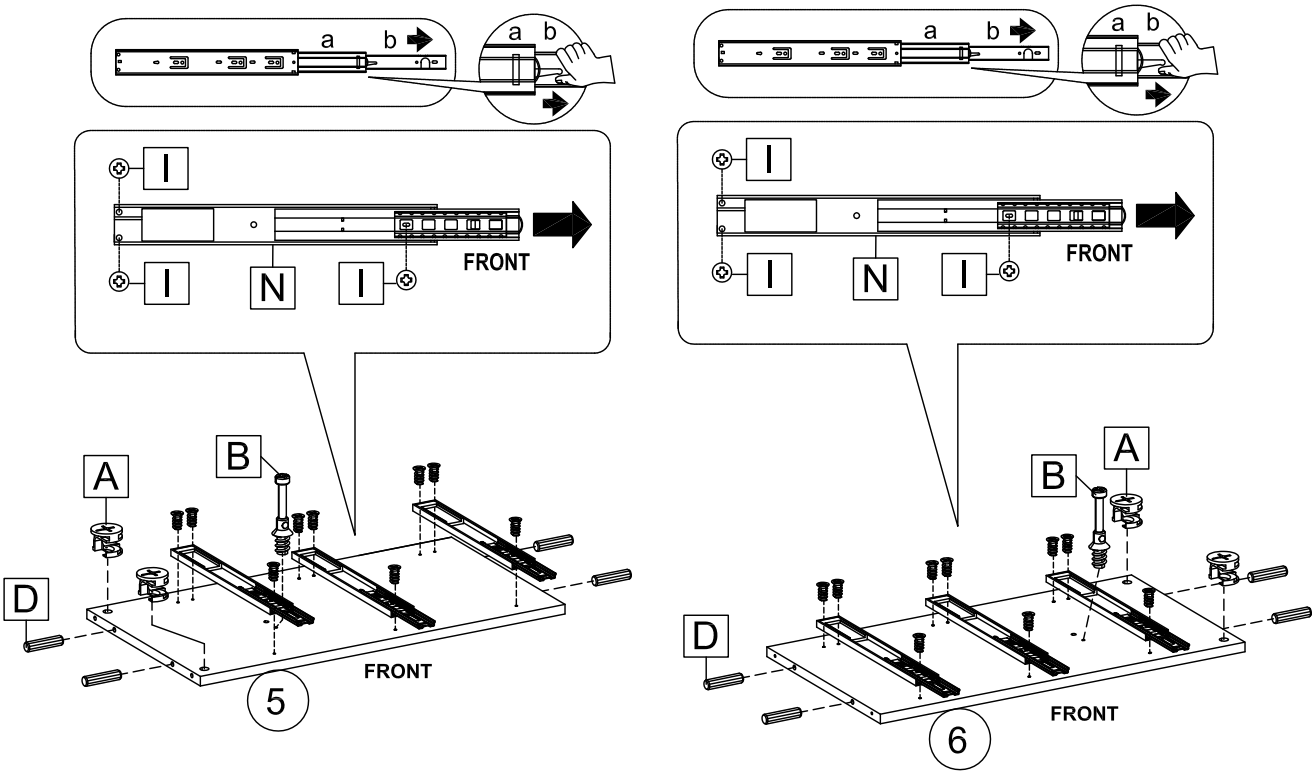

4

A	B	D
18x	8x	24x

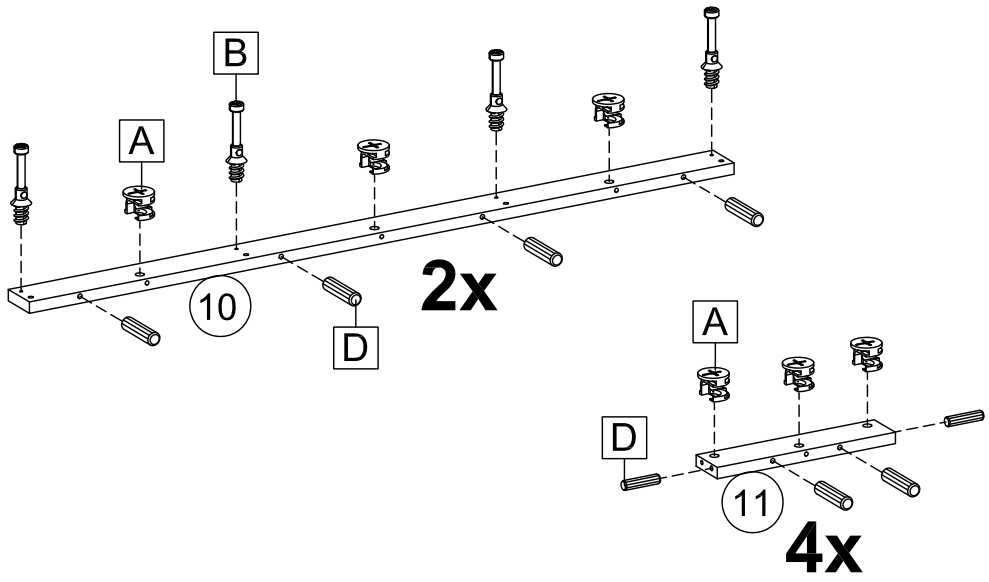

5

C

2x

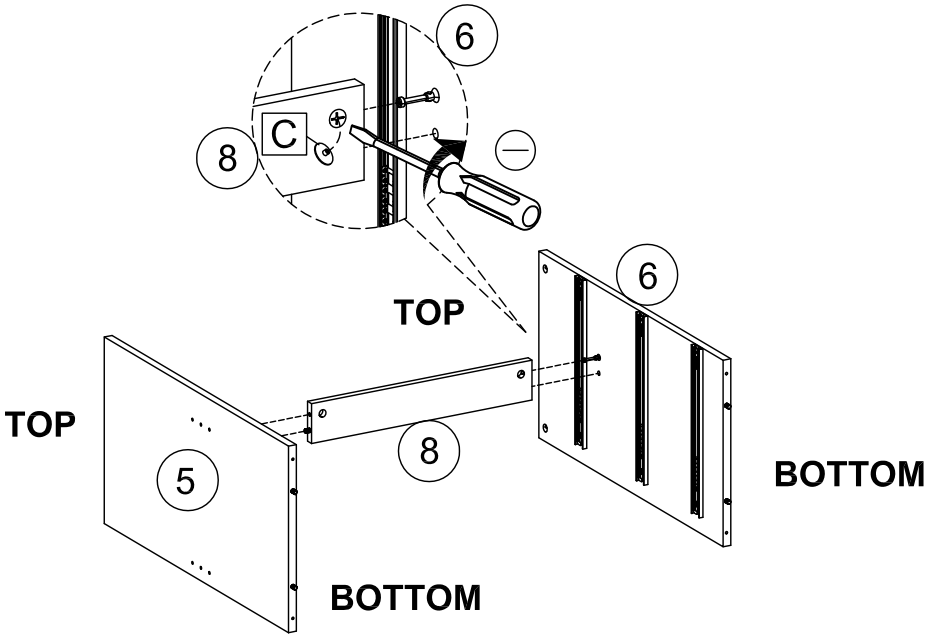

6

G

8x

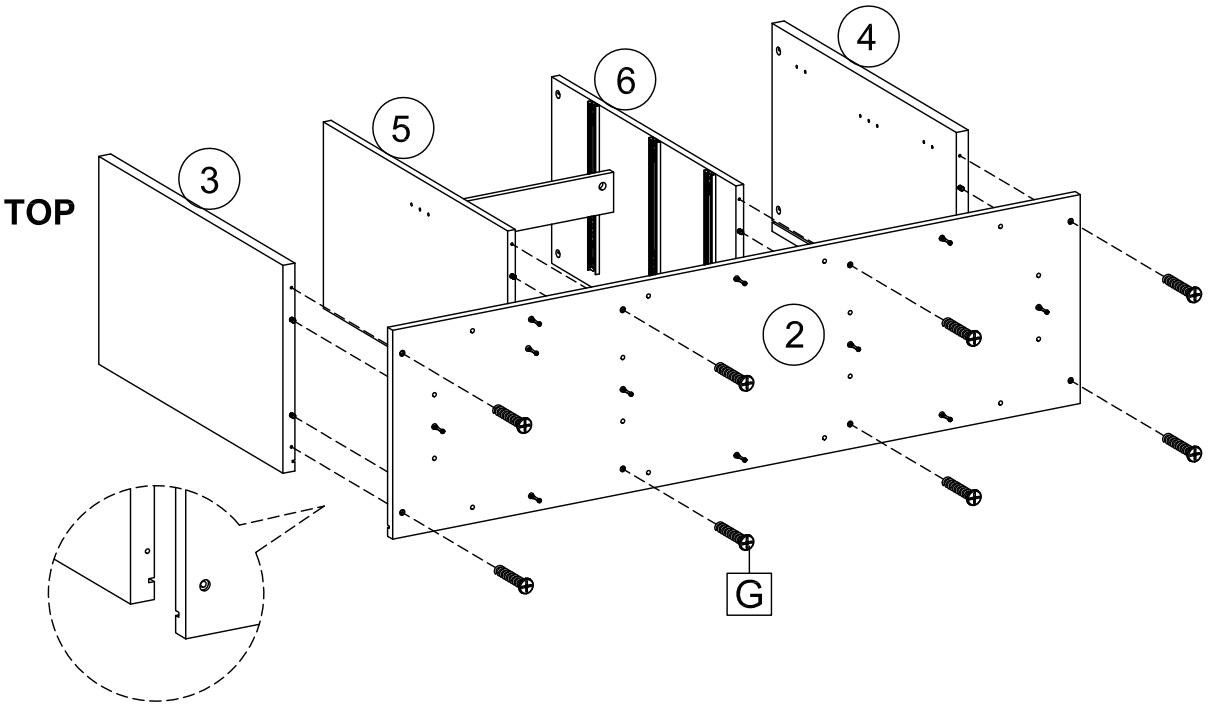

7

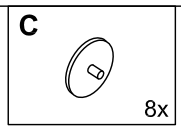

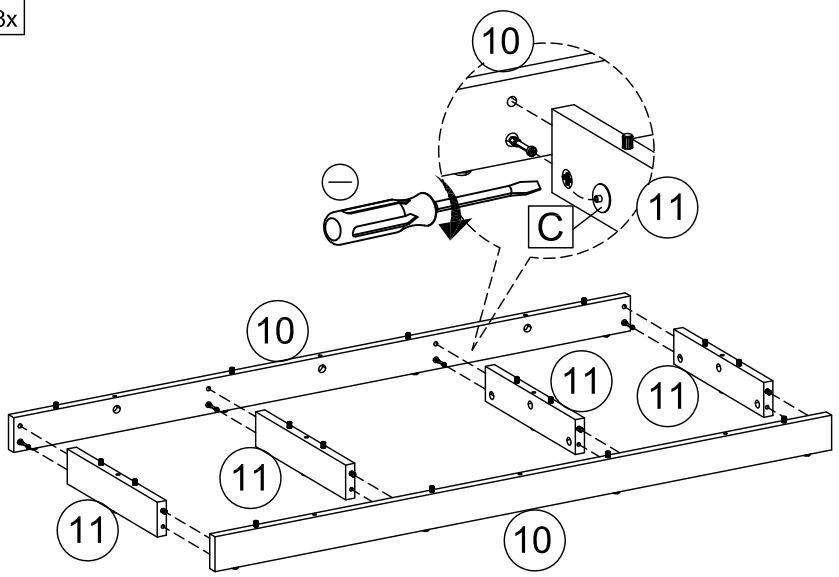

8

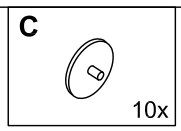

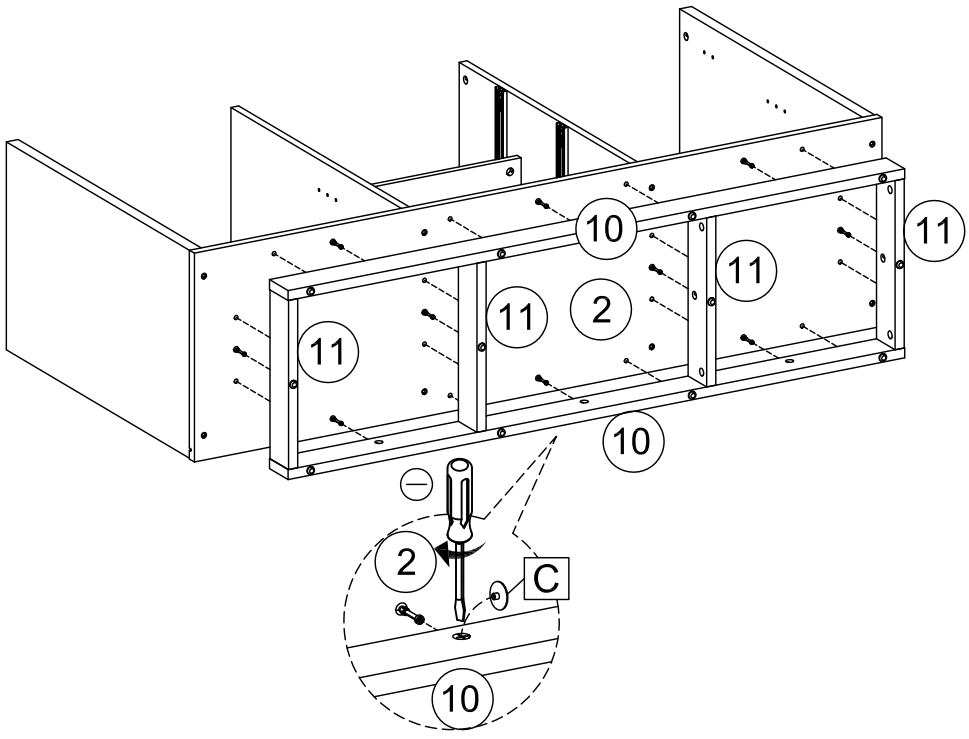

9

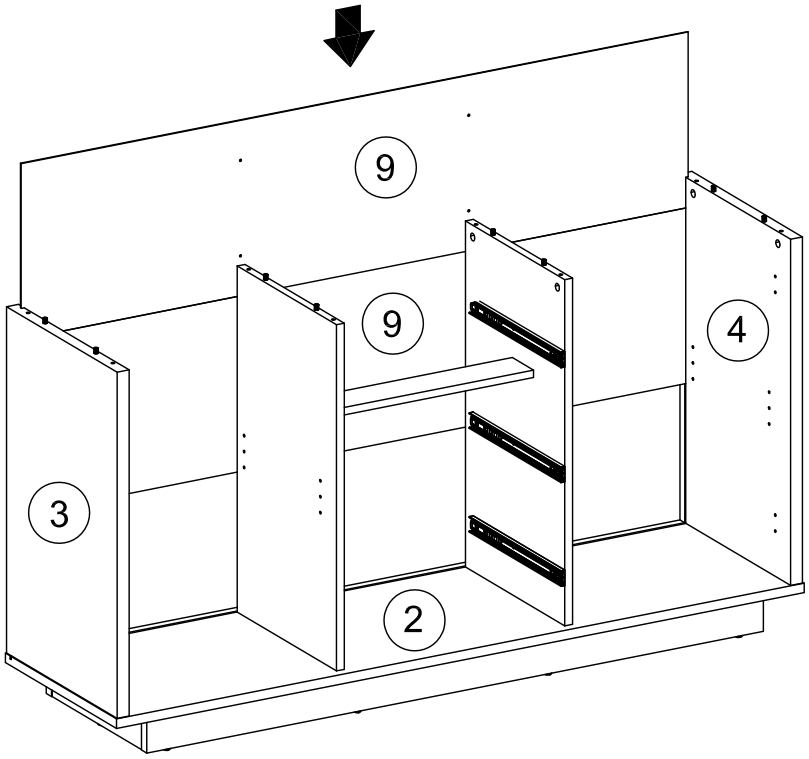

10

c

8x

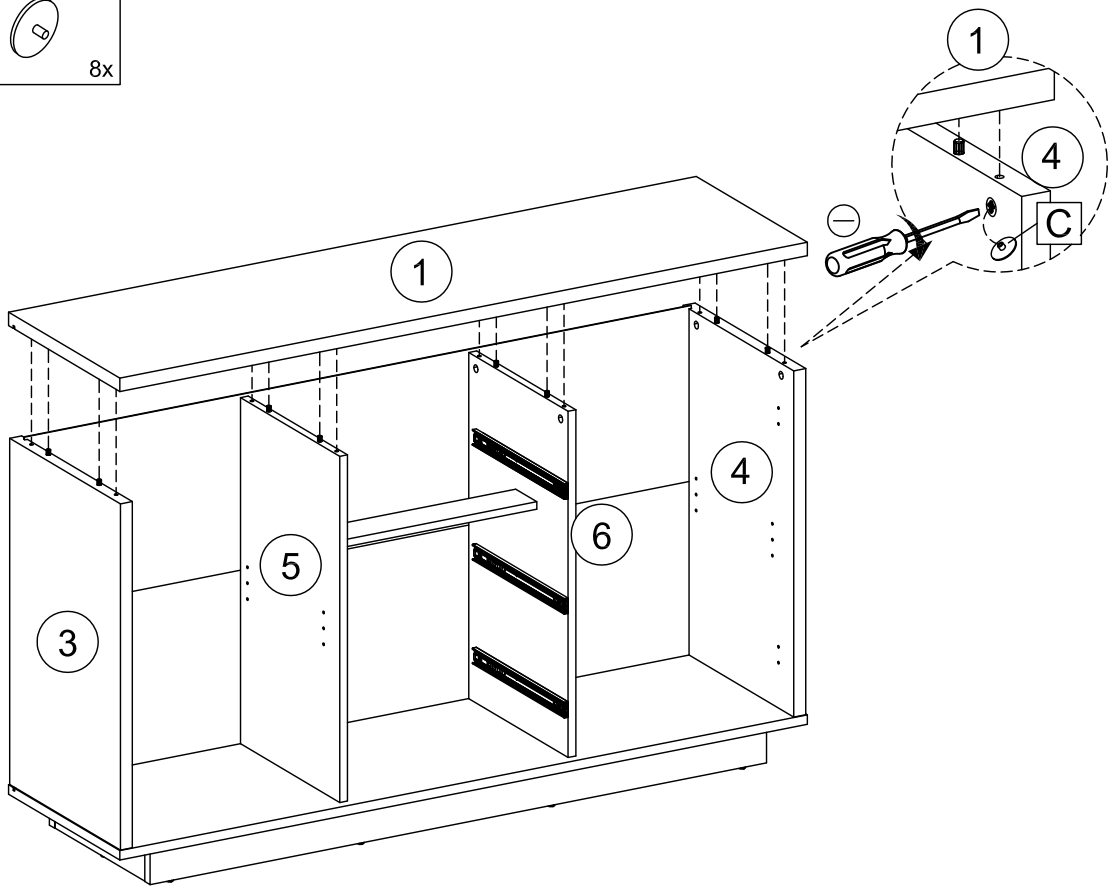

11

F 8x

H 18x

K 18x

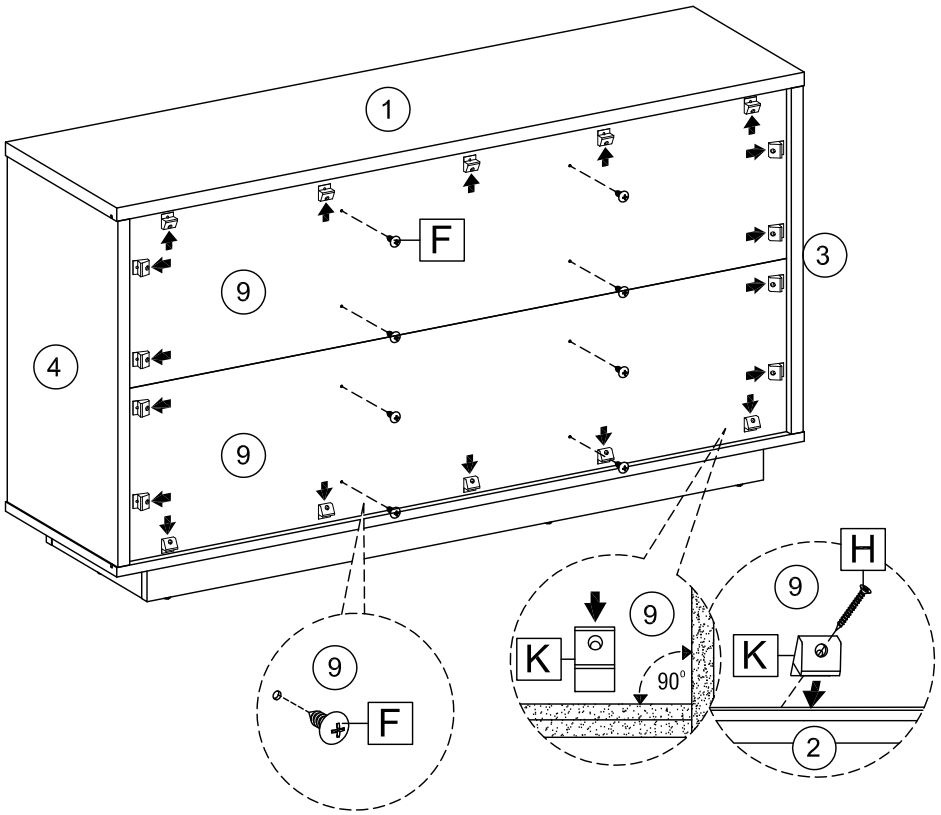

12

J 8x

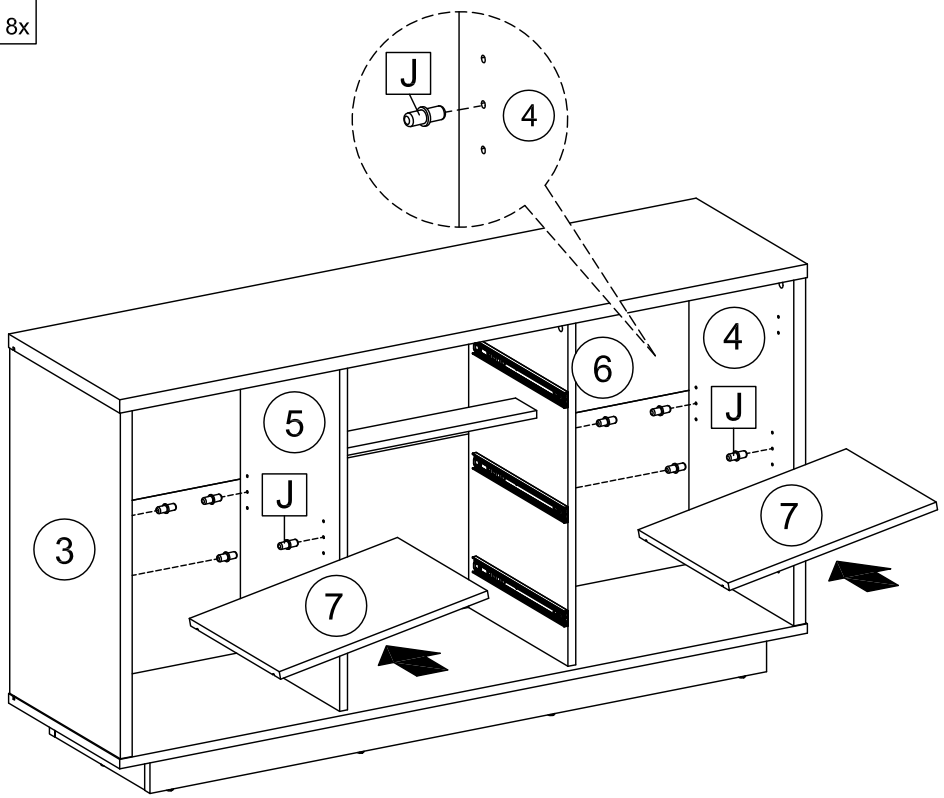

13

A	B	D	I	M	N
6x	6x	24x	18x	3x	6x

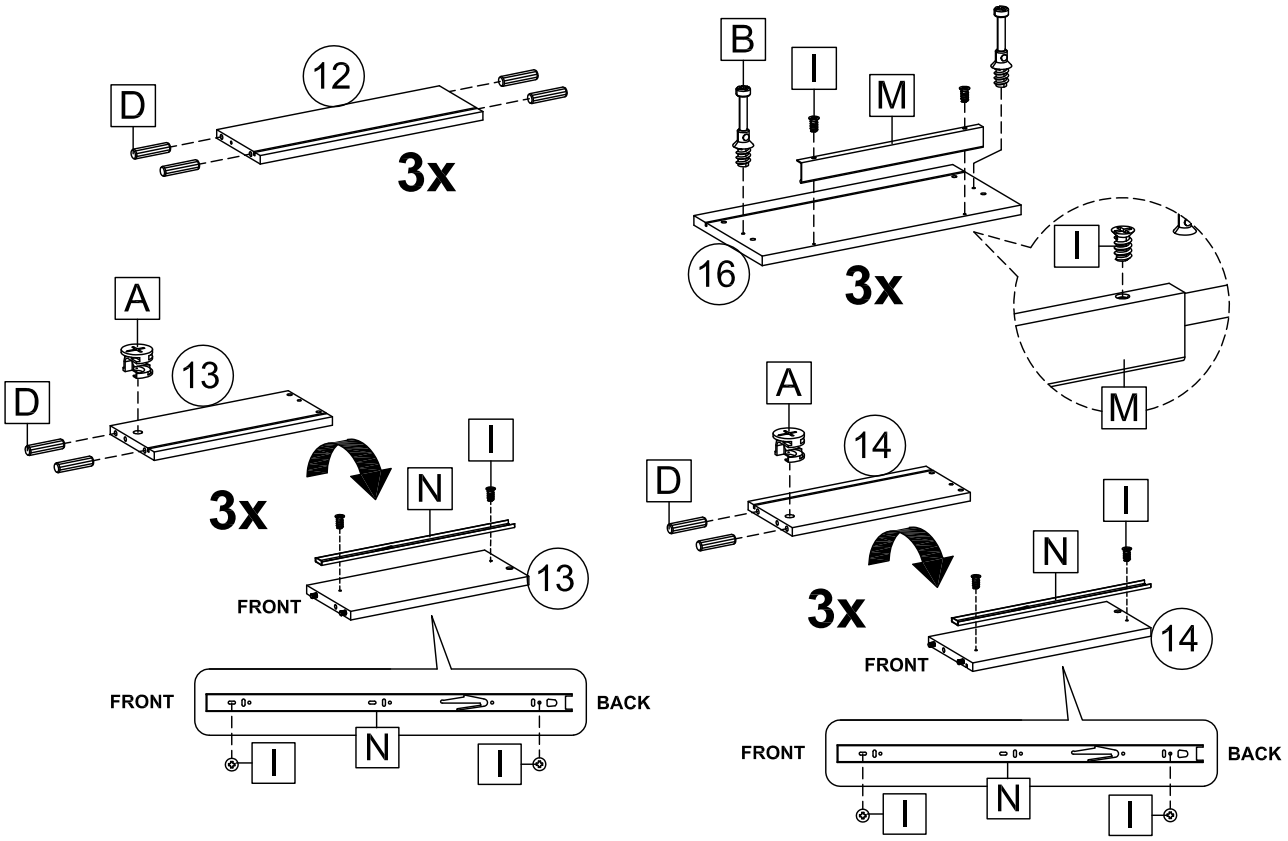

14

C	G	H	K
6x	6x	12x	12x

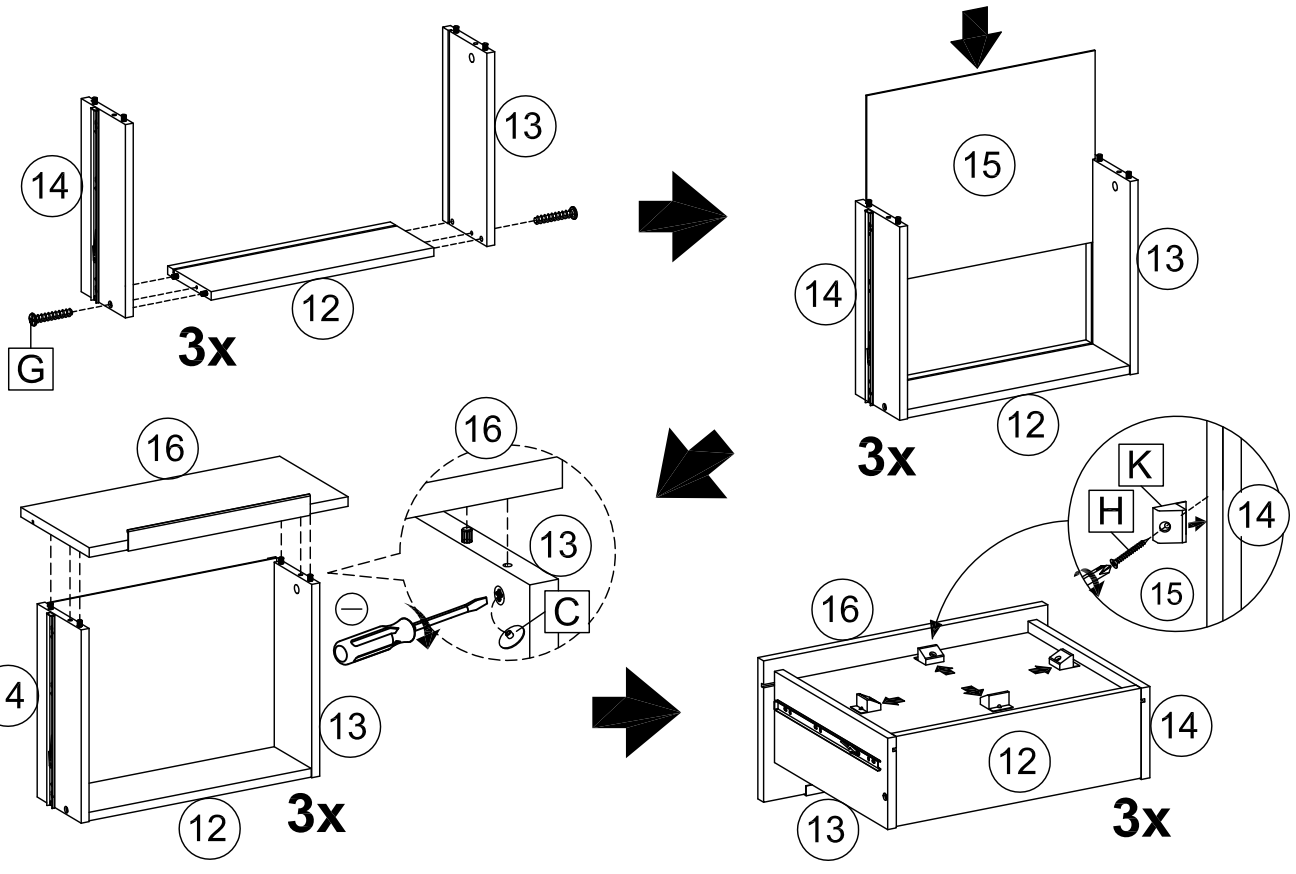

15

E	I	L	M
8x	4x	4x	2x

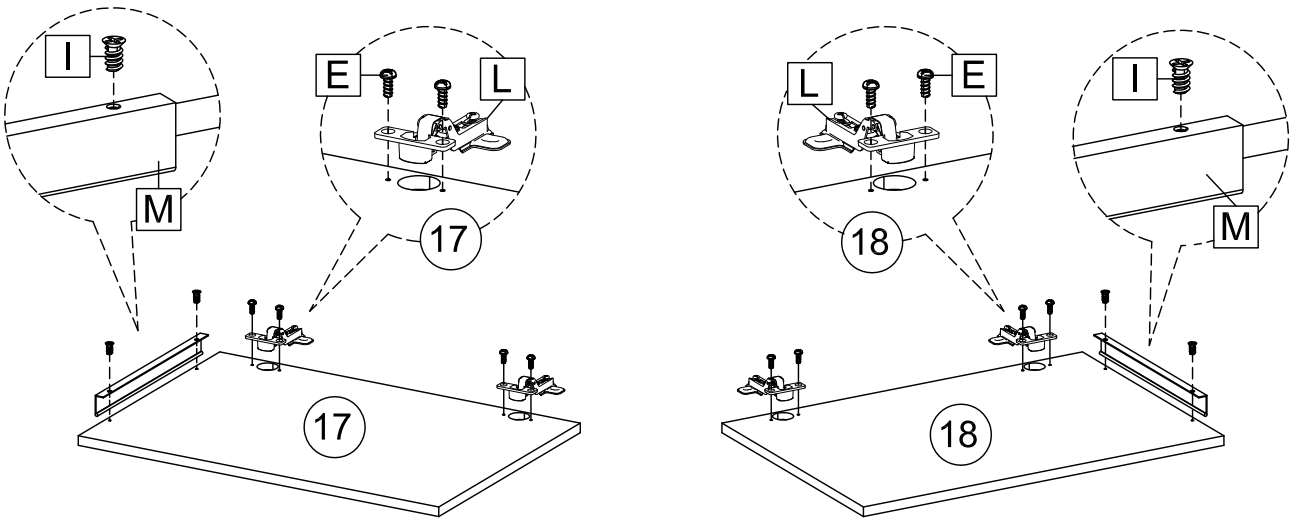

16

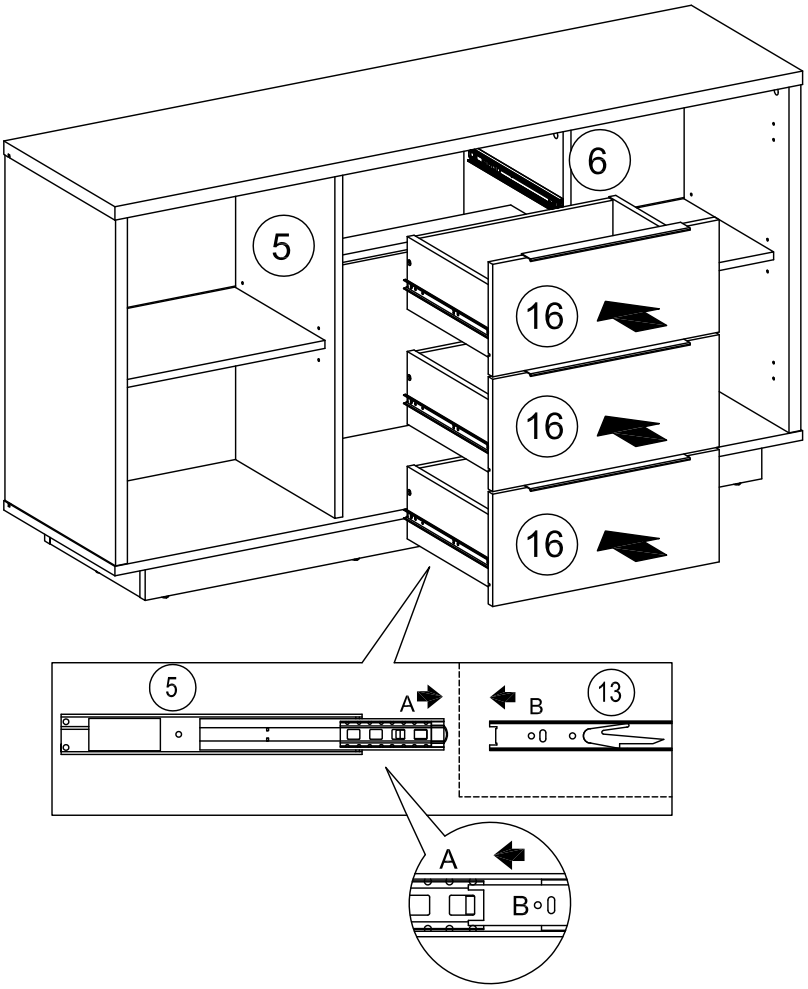

17

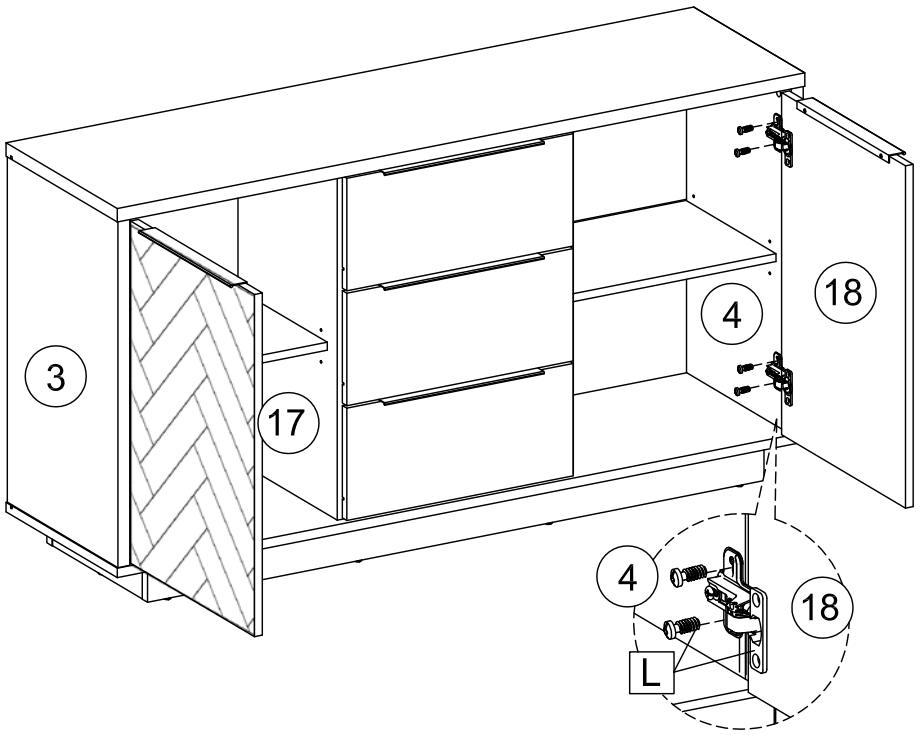

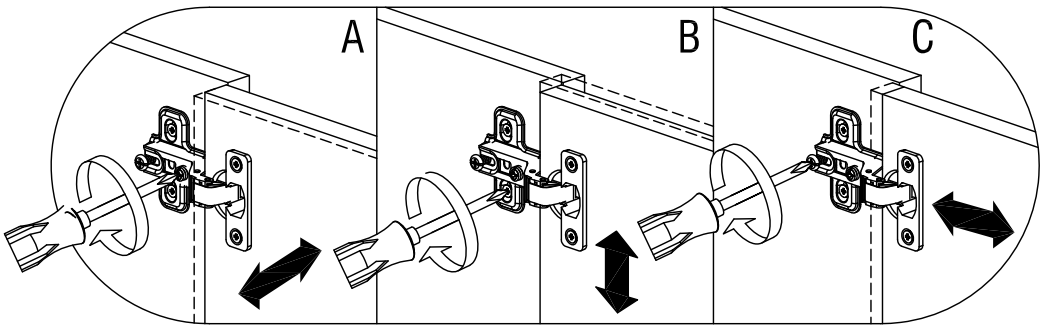

18

O
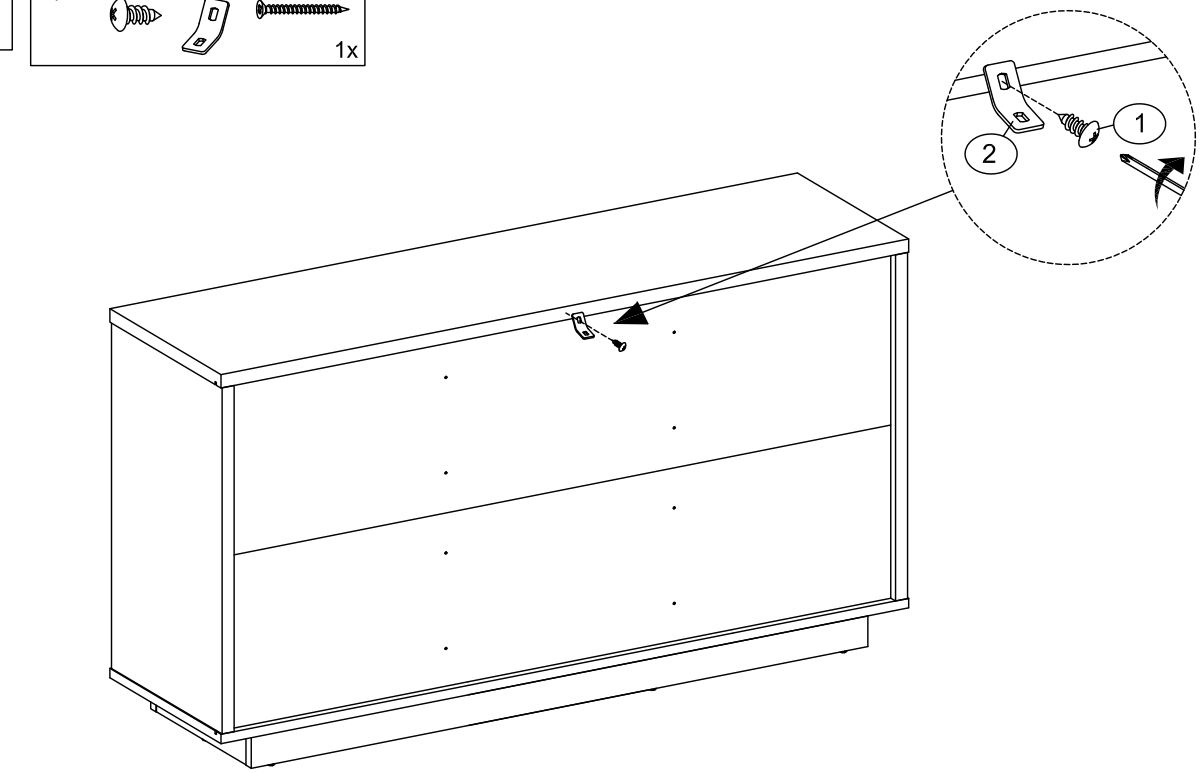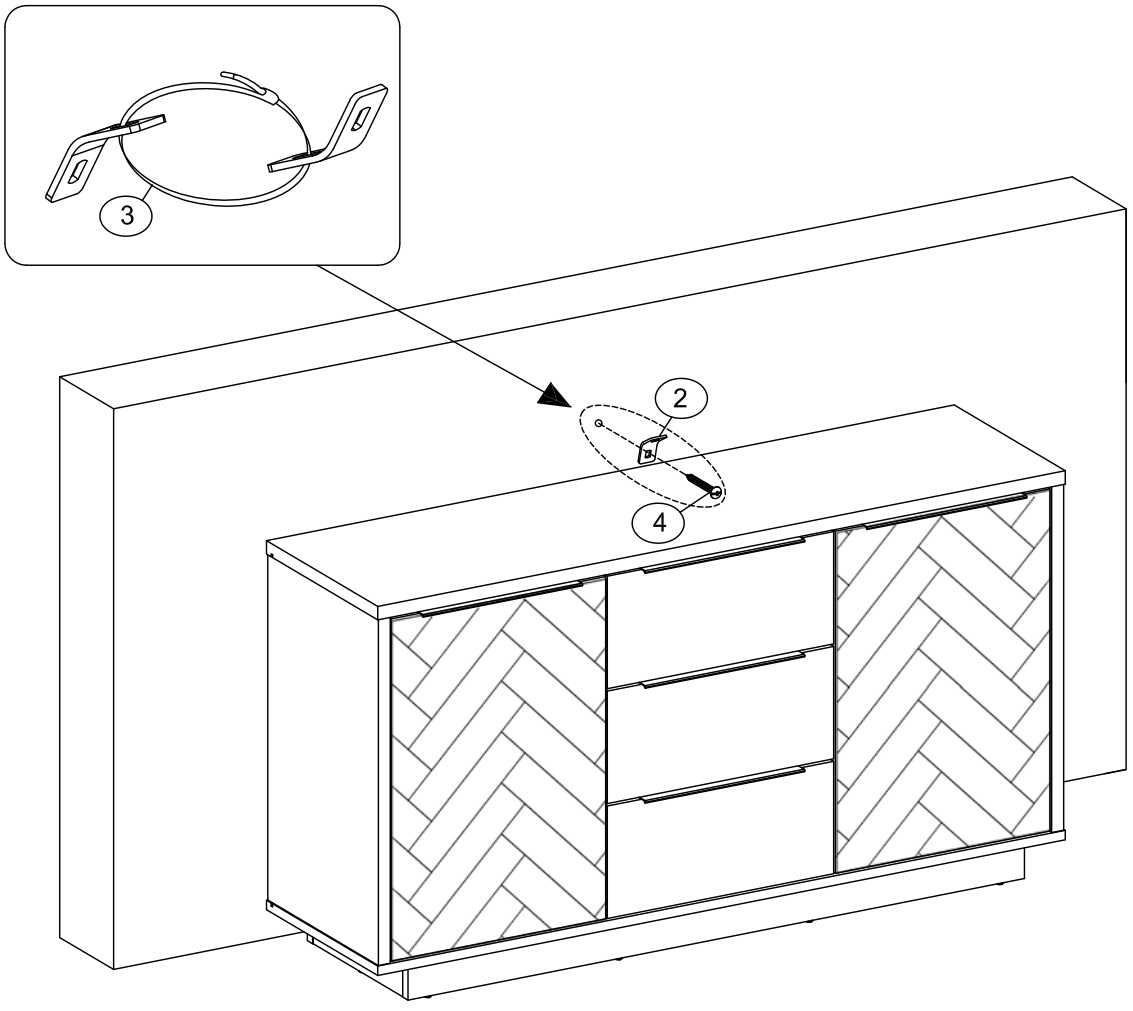
1x